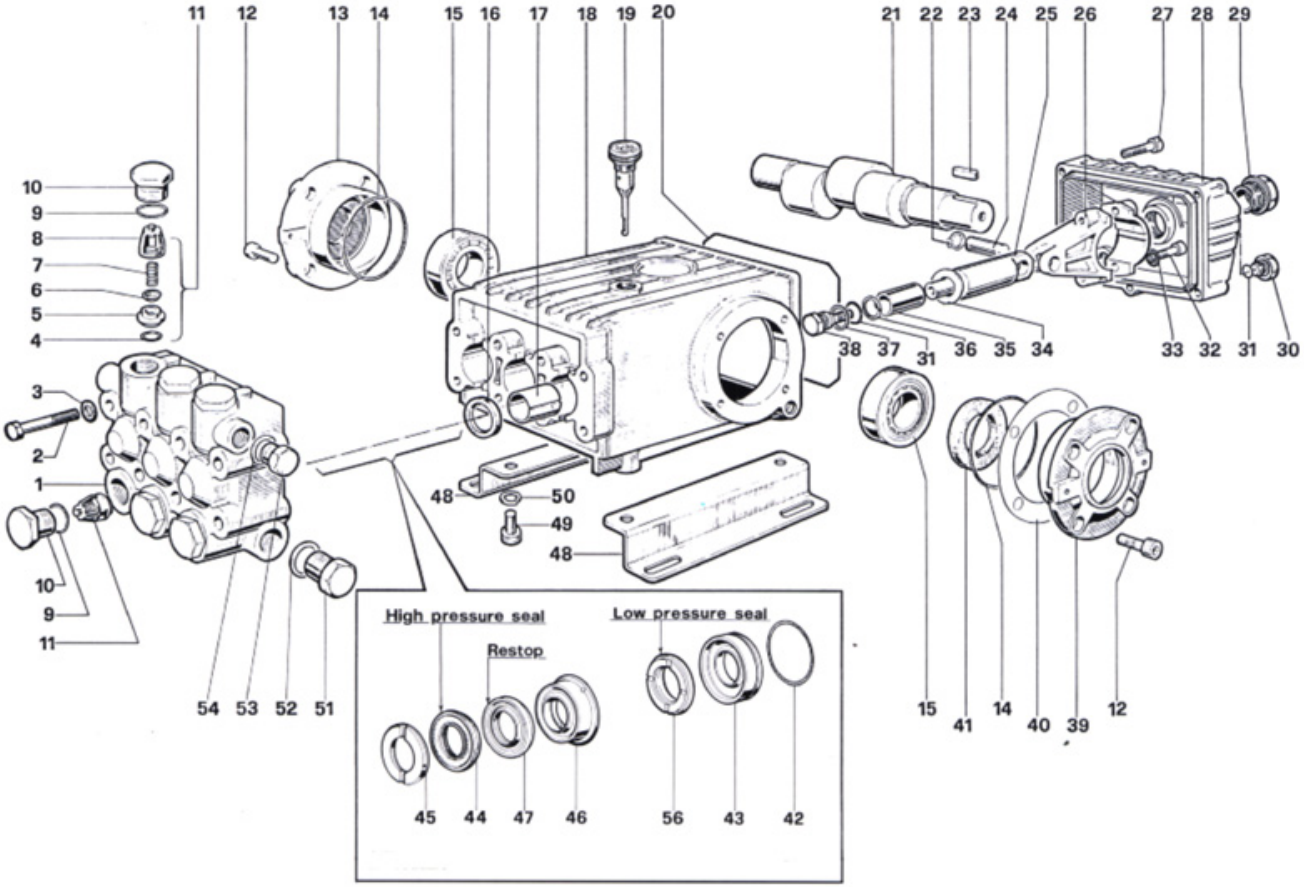

KIT N.	KIT 1	KIT 2	KIT 3	KIT 4	KIT 6	KIT 7	KIT 69	KIT 71	KIT 10	KIT 28
Positions Included Posizioni Incluse	4-5-6-7 8-(11)	16	41	9-10	31-34-36 37-38	45	44-47 56	46-47	42-43	42-43 44-45 46-47 56
N. pcs.	6	3	2	6	3	6	3	3	3	1

INTERPUMP GROUP

WS82 WS101 WS133 W912 W913